Ceegos

www.ceegosth.com

WORLD AUTOMOTIVE
MACHINERY

HISTORY

Ceegos Thailand Co.,Ltd. was established in February 1990, under the initial name **Auto Set Limited.** Mr. Prasong Saengvijit is the founder and the president to date.

Main business lines were: trading, distributing and servicing of automotive service equipment to standard top class vehicle service centers both in private and public sectors. Our inclusive business also provide turn-key CAD design of car service center, consultation, installation, preventative maintenance and service contract.

We also have a factory in Lat Krabang, Bangkok, manufacturing heavy duty truck lifts.

HISTORY

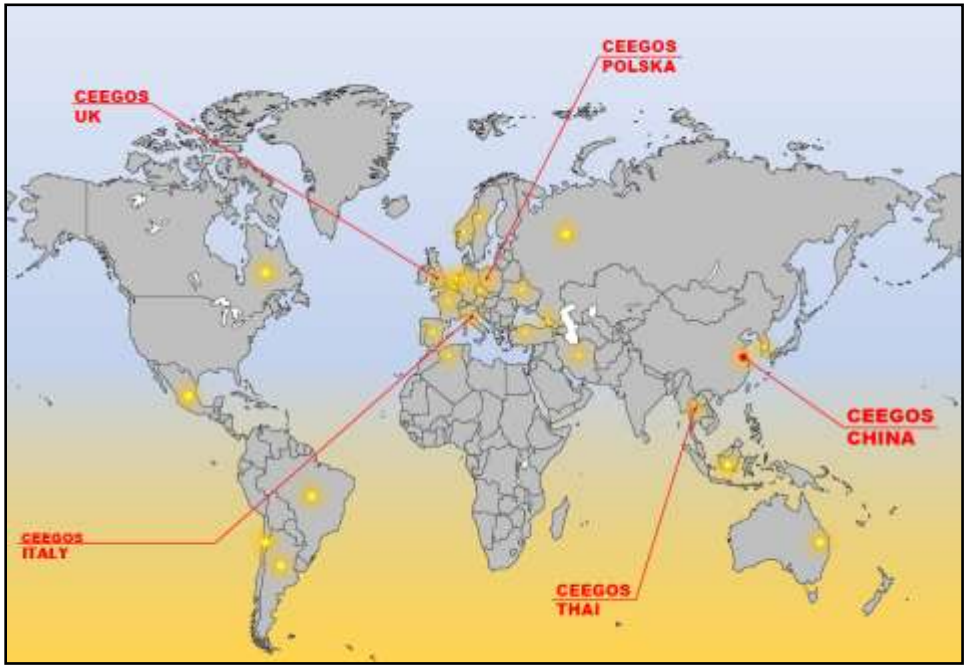

With changing of garage equipment business around the world. European suppliers no longer produce their own products. Instead, they buy OEM products from china.

Auto Set Limited together with long time partner, Kwingtone Shanghai and European partners (such as Werther and Omer) established a factory in China and a global brand name called “Ceegos”.

BUSINESS ACTIVITIES

Garage Equipment Business

- Garage equipment distributor
- Garage equipment manufacturer
- Aftersales service

Consultancy Business

- Automotive business consultant

Design and Construction Business

- Architectural design
- Construction

Automotive Workshop Turn-Key Service

Ceegos

OMA

WARRIOR

MONDOLFO FERRO

ZECA

COMEC

SAMOA

CAR BENCH

CABINA
VERNICIATURA

CAR ASSEMBLY & PROTOTYPING

CAR BENCH

PARKING SYSTEM

HBC enc.

FERRARI SPA ITALY

CAR BENCH

ZECA

OMA

MONDOLFO FERRO

TOYOTA MOTOR THAILAND

Ceegos is one of five tools and equipment suppliers that has signed an MOU with Toyota Motor Thailand.

TOYOTA MOTOR THAILAND

Ceegos is one of five tools and equipment suppliers that has signed an MOU with Toyota Motor Thailand.

CEEGOS FACTORY

In 2011, the first Ceegos factory in Hefei supplies both Ceegos products and OEM products to Asia, Australia, Europe, Mexico and Russia.

CEEGOS FACTORY

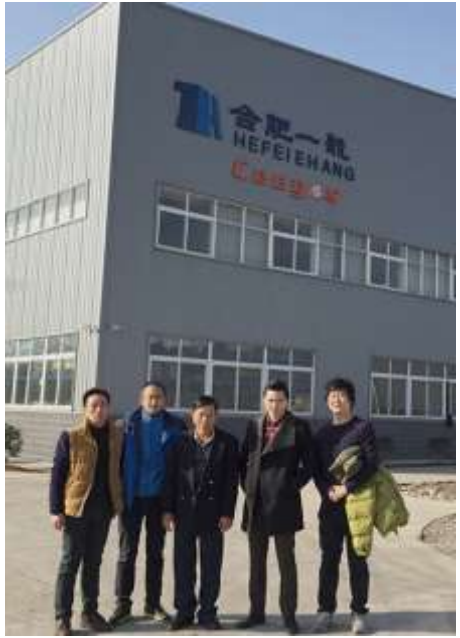

In 2014, a new joint venture between Ehang and Ceegos has completed phase 1 construction of the new factory in Anhui, Hefei to manufacture high quality Ceegos and Ehang lifts as well as OEM products. And expand our sales to USA and Middle East.

CEEGOS FACTORY

CEEGOS FACTORY (NEW)

Export Products

AUTOMECHANIKA

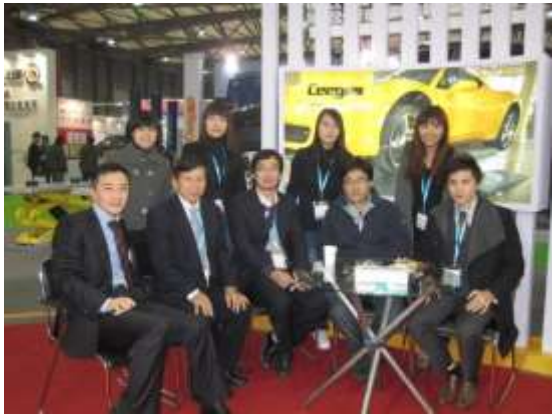

MOTOR SHOW

OEM

Ceegos

BOSCH

ALLIED EQUIPMENT

TECALEMIT

ACTIA MULLER

WERTHER INTERNATIONAL

BendPak PROVIDING AUTOMOTIVE SERVICE SOLUTIONS

ThyssenKrupp

OMCN S.p.A.

CEMB 1946

orient MACHINERY GROUP

Bike-Lift 100 % Made in Italy

TIPRO-TEC SPRAY BOOTH & AIRTOOL TECHNOLOGY

CERTIFICATION

Certificate of Conformity

BIS

EC Type-Examination Certificate

BIS

ISO-9000 Certified Manufacturer

TÜV NORD Certification

CUSTOMERS

We are a certified supplier to supply equipment for Toyota, Isuzu, Mitsubishi, Nissan, Honda, Mazda, Mercedes-Benz, Chevrolet, Ford, Ferrari and also cars importer service shops in Thailand and Asia Pacific.

Furthermore, Ceegos supplies OEM product to many European and American brands and market under our own brand in Eastern Europe, Russia and the whole Asia.

TOYOTA ISUZU HINO NISSAN Ferrari HONDA

LEXUS Ford Mercedes-Benz

Our customer : Toyota

Our customer : Toyota

Our customer : Toyota

Our customer : Isuzu

Our customer : Isuzu

Our customer : Isuzu

Our customer : Isuzu

Our customer : Isuzu

Our customer : Isuzu

Our customer : Mitsubishi

Our customer : Mitsubishi

FERRARI FACTORY

FERRARI FACTORY

FERRARI INSPECTION CENTER

FERRARI BANGKOK

MASERATI

MASERATI

ALFA ROMEO

PORSCHE

RWB THAILAND AUTOHAUS

CONTINENTAL (MALAYSIA)

VALVOLINE (CHINA)

Our customer : HOME GARAGE

Training center : GS.

Standard training center with fully hi-tech equipment.

Training center : Body & Paint.

Standard training center with fully hi-tech equipment.

Design layout of vehicle service center.

Consultation.

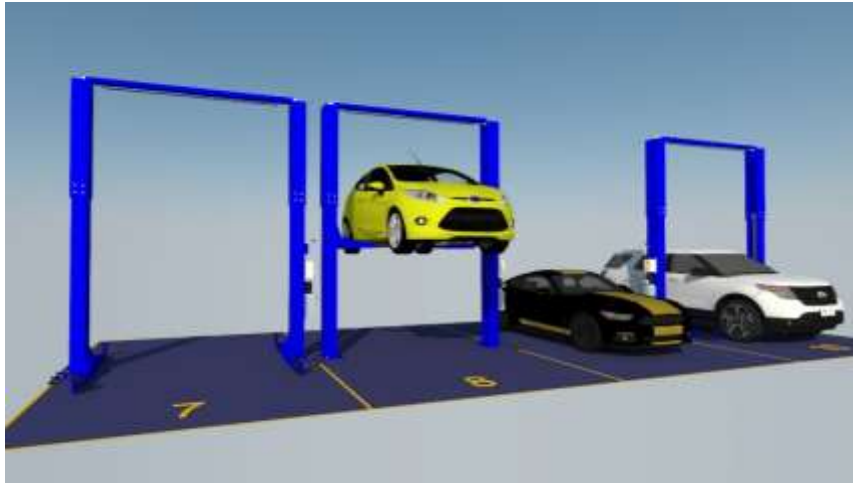

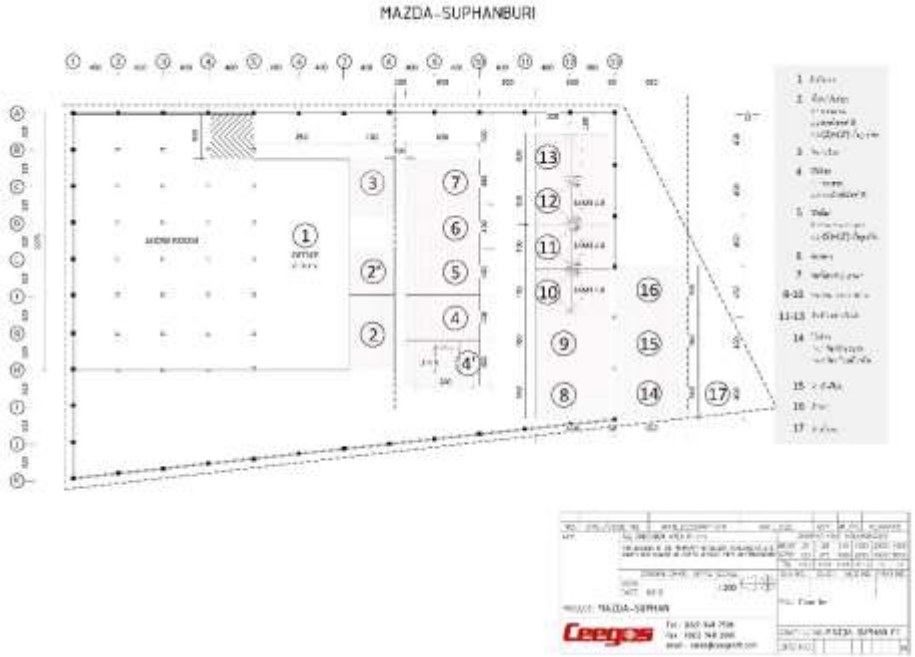

Oil, Air system.

Consultation according to layout usage.

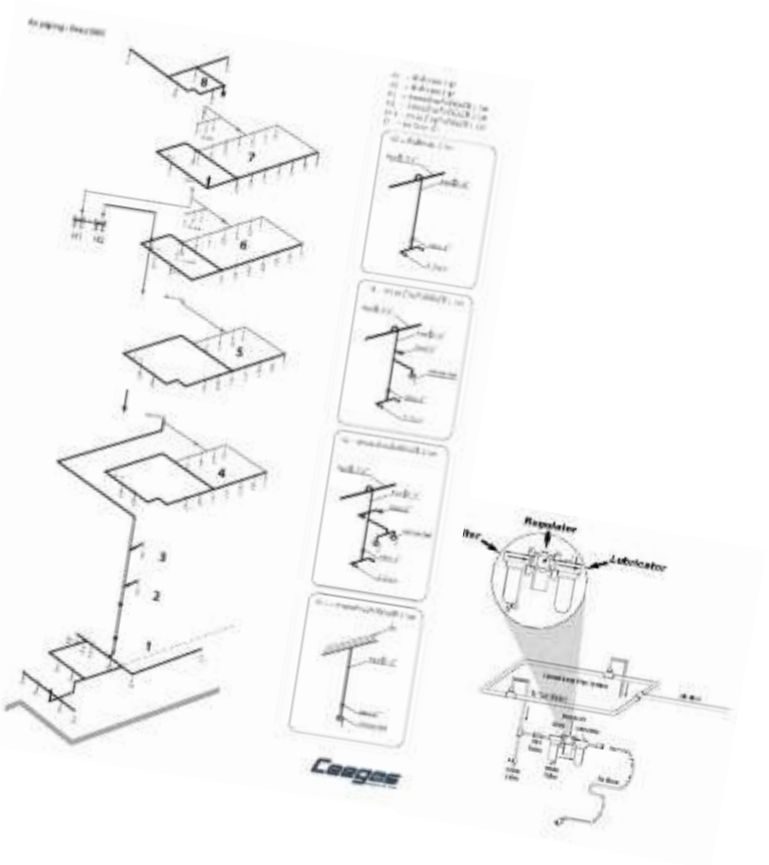

WORLD AUTOMOTIVE
MACHINERY

THANK YOU

T (66)2-948-2500
F (66)2-948-2600
E contact@ceegosth.com

150 Soi.RuammitPattana,
Tahrank Bangkhen, Bangkok 10220

CEEGOS (THAILAND) COMPANY LIMITED

WWW.CEEGOSTH.COM